# iPro

**Design Mario Cucinella** | **iGuzzini**

Last information update: February 2025

**Product configuration: EP49.01**
EP49.01: Spotlight with bracket - Warm White LED - On/Off - Spot optic - 11.1W 781.1lm - 3000K - White

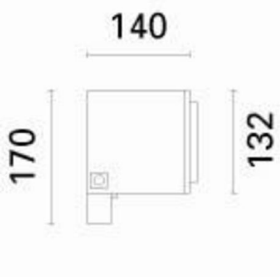


**Product code**
EP49.01: Spotlight with bracket - Warm White LED - On/Off - Spot optic - 11.1W 781.1lm - 3000K - White

**Technical description**
Floodlight designed to use Warm White LED lamps with a Spot optic. Can be installed at ground level, on walls (using screw anchors) and on pole mounting systems. The luminaire consists of an optical assembly/component-holding box and hidden fixing bracket. The optical assembly and front frame are made of die-cast aluminium alloy painted with a smooth finish (grey RAL 9007) or a textured finish (white RAL 9016). The painting process includes a multi-step, pre-treatment process, in which the main phases are degreasing, fluorozirconation (a protective surface film) and sealing (with a nano-structured silane layer). The next painting stage consists of a primer and a liquid acrylic paint, cured at 150°C, with a high level of weather and UV ray resistance. The tempered sodium-calcium glass cover has customised serigraphy, is 5mm thick, and joined to the frame with silicone. The frame is fastened to the optical assembly by captive M5 AISI 304 stainless steel screws and a galvanised steel safety cable. The product includes a Warm White monochrome LED circuit and an Opti Beam Lens technology optic. The component-holding box, in the rear of the luminaire, is set up to hold the control gear, which is fixed with captive screws on a galvanised steel pull-out plate. The control gear can be accessed through the rear door made of painted aluminium alloy, fixed to the product body with four M5 AISI 304 stainless steel captive screws and a safety cable. iPro can be adjusted +95°/ -5° relative to the horizontal line using a bracket made of extruded aluminium, on which a graduated scale (with 15° steps) is marked using serigraphy. The internal silicone seals guarantee watertightness IP66h Set up for pass-through wiring using a double M24x1.5 nickel-plated brass cable gland (suitable for cables with 7÷16mm diameter). All external screws used are made of A2 stainless steel. The luminaire technical characteristics conform to EN60598-1 standards and particular requirements.

**Installation**
Ground, wall or ceiling installation using special bracket. Secure using screw anchors for concrete, cement and solid brick.

| Colour | Weight (Kg) |
|---|---|
| White (01) | 2.76 |

**Mounting**
wall arm|ground surface|wall surface|ground anchored|ground spike|ceiling surface|u-bracket

**Wiring**
Luminaire fitted with On/Off control gear.

**Notes**
Overvoltage protection: 3KV Common Mode and 2KV Differential Mode (we recommend using the JAL6 item code).

Complies with EN60598-1 and pertinent regulations

960°C IK07 IP66

**Technical data**

| | |
|---|---|
| lm system: | 781 |
| W system: | 11.1 |
| lm source: | 1070 |
| W source: | 9.7 |
| Luminous efficiency (lm/W, real value): | 70.4 |
| lm in emergency mode: | - |
| Total light flux at or above an angle of 90° [Lm]: | 0 |
| Light Output Ratio (L.O.R.) [%]: | 73 |
| Beam angle [°]: | 11° |
| CRI (minimum): | 80 |
| Colour temperature [K]: | 3000 |
| MacAdam Step: | 2 |
| Life Time LED 1: | 100,000h - L90 - B10 (Ta 25°C) |
| Life Time LED 2: | 100,000h - L90 - B10 (Ta 40°C) |
| Voltage [Vin]: | 230 |
| Lamp code: | LED |
| Number of lamps for optical assembly: | 1 |
| ZVEI Code: | LED |
| Number of optical assemblies: | 1 |
| Intervallo temperatura ambiente: | from -25°C to 50°C. |
| Power factor: | See installation instructions |
| Inrush current: | 5 A / 50 µs |
| Maximum number of luminaires of this type per miniature circuit breaker: | B10A: 31 luminaires<br>B16A: 50 luminaires<br>C10A: 52 luminaires<br>C16A: 85 luminaires |
| Overvoltage protection: | 4kV Common mode & 2kV Differential mode |
| Control: | On/off |

**Polar**

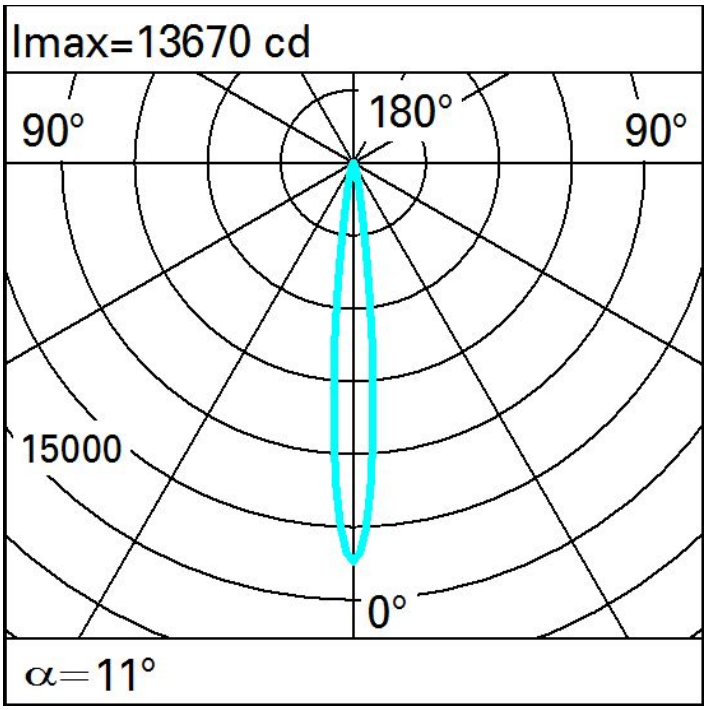


**Isolux**

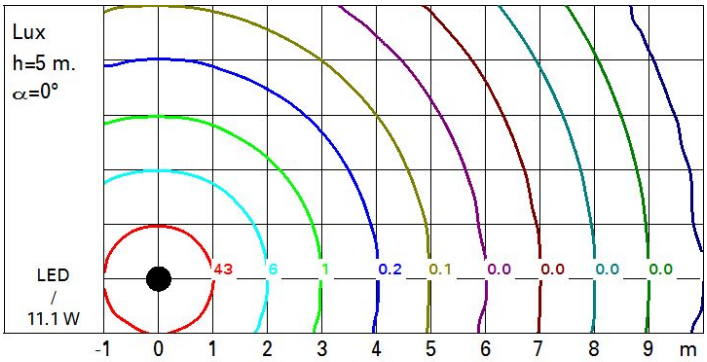

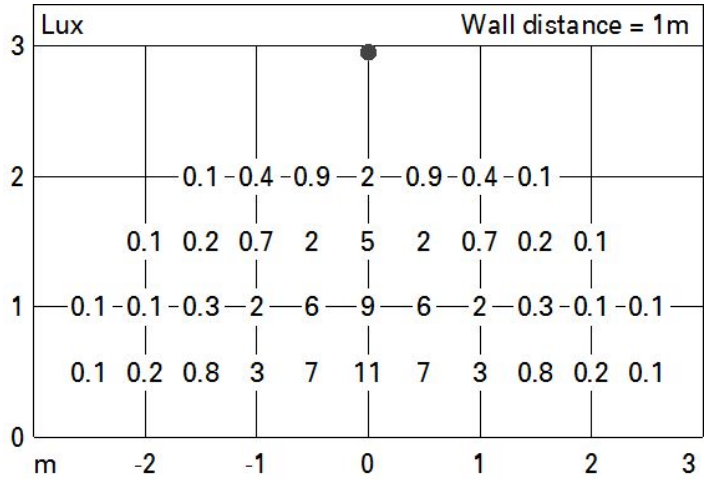
**Illuminances**